Quick Start Guide: Access PEC 1464 Web GUI

1. After connecting your PEC 1464 with your local network, connect the PEC 1464 via the supplied mini USB cable to a PC or MAC with the latest version of LynxCentraal or yelloGUI installed.

2. In LynxCentraal: Look for the PEC 1464 in the "yellow" section.
In yelloGUI: The device will be listed in the device list.

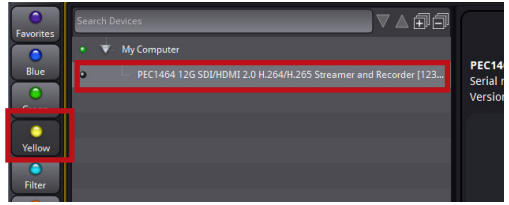

3. On the Main Page a "Network" section should be visible with DHCP select. Because of this the IP Address shown for your device will vary. Copy the IP Address to your preferred browser to show the Web UI.

Note: The browser may display a security warning when accessing this address. This can be avoided by uploading an SSL certificate to the device



4. On the login page enter the default password:

yellobrik$admin

The password should be changed via the "System" settings in the web UI.

Note: If a full factory reset is performed (i.e. with the factory reset button on the device) the password will reset as well.

For networks requiring a fixed IP address, change the DHCP setting to Static and enter the appropriate network settings in LynxCentraal or yelloGUI.

yellobrik®
PEC 1464

Technical Specifications

SDI Video Input	1 x SDI Input on 75 Ohm BNC connector 1 x SDI Loop Output on 75 Ohm BNC connector
	SMPTE ST 2082 (**12G**), SMPTE ST 2081 (**6G**), SMPTE 424M (**3G**), SMPTE 292M (**1.5G**)
	Electrical Return Loss: >15dB from 5MHz to 1.5GHz, >10dB from 1.5GHz to 3GHz, >7dB from 3GHz to 6GHz, >4dB from 6Ghz to 12GHz
	Automatic cable EQ (Belden 1694A cable) 190m @ 1.5Gbit/s, 150m @ 3Gbit/s, 85m @ 12Gbit/s
HDMI Input	1x HDMI 2.0b Input
Fiber Input	**SFP Port (Optional):** SMPTE ST-2082 1 x fiber optic input (LC/PC Connections) 1 x fiber optic loop output (LC/PC Connections)
Network	10/100/1000 Ethernet (RJ-45) - Cat 7
Analog Audio	1x 3.5mm Stereo Audio Jack (Tip Ring Sleeve)
USB	1x USB 3.0 female Type A for storage media (Supported formatting: FAT32, exFAT, vFAT, Ext2, Ext3, Ext4)
	1x USB Mini female Type B port for control, monitoring, and updates
Power	+12V DC @ 16W (supports 10 to 24V DC input range)
Includes	Module, AC power supply, Mini-USB cable, ethernet cable



WARNING
CLASS 1M LASER PRODUCT
LASER RADIATION

Do not view directly with optical instruments

Visit our website for the latest product updates: **www.lynx-technik.com**

LYNXTechnik | Broadcast Television Equipment

yellobrik® | Quick Reference

PEC 1464

12G-SDI & HDMI H.265 Streamer Recorder

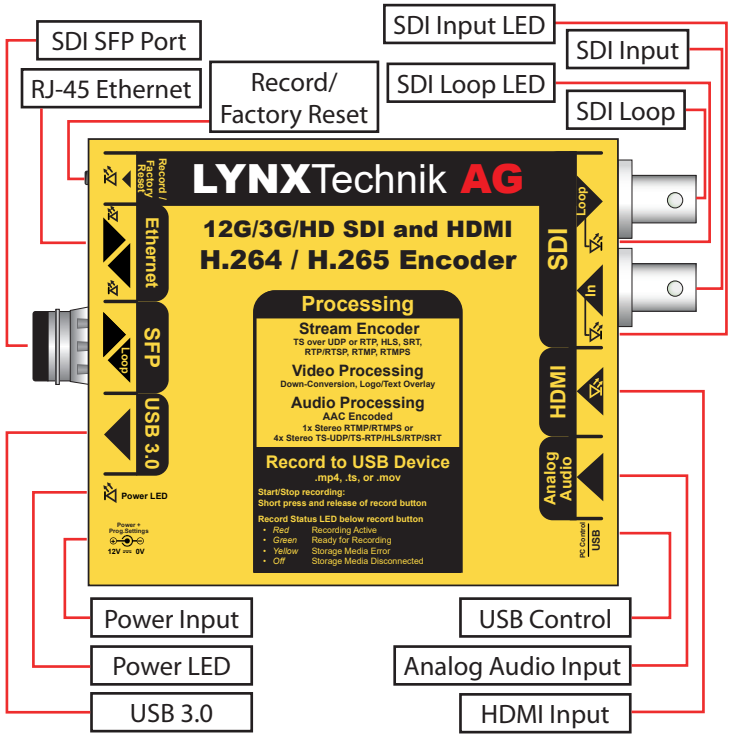

The PEC 1464 is a versatile h.264/h.265 streamer and recorder that simultaneously streams and records 12G-SDI or HDMI video sources, with support for multiple audio options, real-time logo insertion, text overlays and transmission fallback.

Connections

All connections are clearly labelled on the module for easy identification.
The SDI input and Loop output use standard 75 Ω BNC connectors and support electrical video connections. For fiber connectivity, optional SFP modules can be installed, enabling SDI signal transmission over fiber. HDMI video input is provided through a female HDMI 2.0b connector, supporting high-resolution video sources.
Network connectivity is available via RJ-45. A CAT 7 cable is recommended to ensure reliable network communication and access to the Web User Interface. Analog audio can be connected through the female 3.5 mm TRS stereo jack. The USB 3.0 Type A connector is dedicated to external storage devices and is used for recording.

Left Side

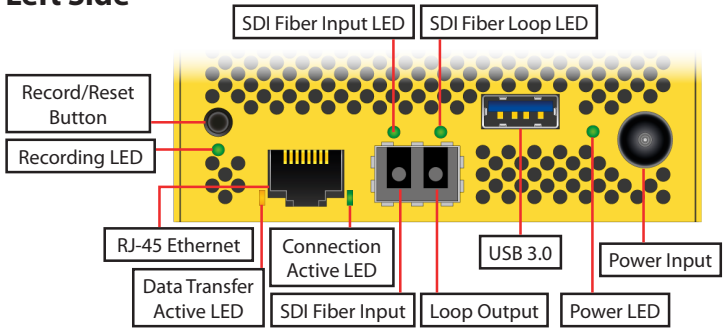

Right Side

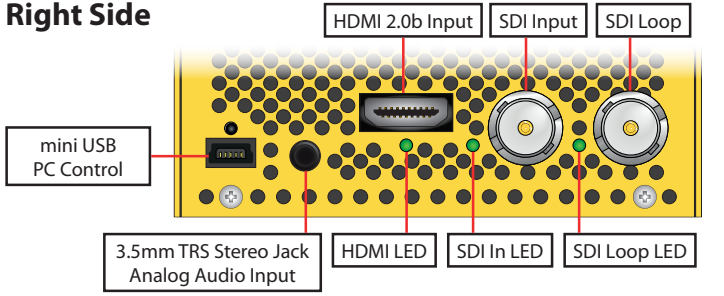

Starting a Live Stream and/or Recording

To start a live stream, select the streaming type and configure the target destination(s). Activate the "Live" slider in the Web User Interface. To record, connect a formatted USB 3.0 storage device. Configure the recording format and additional parameters. Start recording by clicking the "Record" button in the Web UI or pressing the physical Record button once. **Note:** The maximum recording duration for both MP4 and MOV file formats is 4 hours per recording.

Module LEDs

Power / Prog Setting LED

Green	Power OK - no internal programmed settings are present (factory preset)
Yellow	Power OK - some programmed settings are active*
Yellow (blinking)	"Locate Module" function active
Red (blinking)	Hardware Issues
Off	Power not present

*Internal settings have been made using LynxCentraal or the Web GUI

Recording LED

Red	Recording Active
Green	Ready for Recording
Yellow	Storage Media Error (for example wrong formatting, etc.)
Off	Storage Media Disconnected (LED turns off after safely ejecting the device in the Web GUI)

SDI Input/SDI Loop/HDMI/Fiber RX/Fiber Loop Status LED

Green	Valid Signal
alternating Green/Red	**Only on SDI-Input:** Input recognized, but format not compatible
Off	No Valid Signal Detected

Changing Stream and Recording Configurations

The PEC 1464 Web User Interface (Web UI) provides an intuitive way to configure streaming and recording parameters. Settings can be adjusted directly through clearly organized menus. Changes are applied immediately, allowing users to configure stream protocols, destinations, recording formats and other operating parameters without navigating complex menus or restarting the device.

Firmware Updates / Control Software

To update a yellobrik, power it on and connect it to a PC or Mac via USB. Ensure that LynxCentraal is installed and running on the computer. The software can be downloaded here: https://lynx-technik.com/software-applications/

Lynx Centraal will indicate when a new firmware version is available. To perform the update, navigate to the "Update" tab, select the devices to be updated, and click "Start Update" in the bottom-right corner.

Lynx Technik firmware updates are free of charge.

Optional Mounting Solutions

The optional RFR 1001 mounting bracket allows the module to be installed on any surface and 19'' rack rails.



The RFR 1200 rack frame can hold up to 14 single width yellobriks or 7 dual slots (like the PEC). It can provide power redundancy for all installed devices.

