yellobrik®
OTR 1A41

Technical Specifications

SDI Video	4x SDI inputs on 75 Ohm BNC connections [OTX 1A41] 4x SDI outputs on 75 Ohm BNC connections [ORX 1A41]
	SMPTE 259M-2008, SMPTE 292-1:2012, SMPTE 292-2:2011, SMPTE 424M-2006, SMPTE ST-2081, SMPTE ST-2082, DVB ASI
	Multi-standard / Multi-format operation auto-detect. Multi-rate reclocking: 270Mbit / 1.5Gbit / 3Gbit / 12Gbit
	Return loss: >15dB up to 1.5GHz ; >10dB up to 3GHz >7dB up to 6GHz ; >4dB up to 12GHz
	Automatic Cable EQ: 250m@270Mbit/s, 190m@1.5Gbit/s (Belden 1694A cable) 140m@3Gbit/s, 80m@12Gbit/s (Belden 4794R cable)
Fiber I/O	1x COM port: Fiber I/O port (LC/PC Connections) 1x UPG port: Fiber expansion port (LC/PC Connections)
	SMPTE 297M - 2006
	Internal CWDM Multiplexing on wavelengths: 1270nm, 1290nm, 1310nm and 1330nm. Optical budget: 10.6dB
	Fiber activity LEDs for each channel
Power	+12V DC, OTX 1A41 @ 5.4W | ORX 1A41 @ 4.4W Supports 9 - 17V DC input range 2 Power Status LED provided

WARNING
CLASS 1M LASER PRODUCT
LASER RADIATION

Module laser is active as soon as power is connected. Do not view directly with optical instruments.

Visit our website for the latest product updates: **www.lynx-technik.com**

LYNXTechnik | Broadcast Television Equipment

yellobrik® Quick Reference

OTR 1A41
4-Channel 12G-SDI (8K) Fiber Transmission System

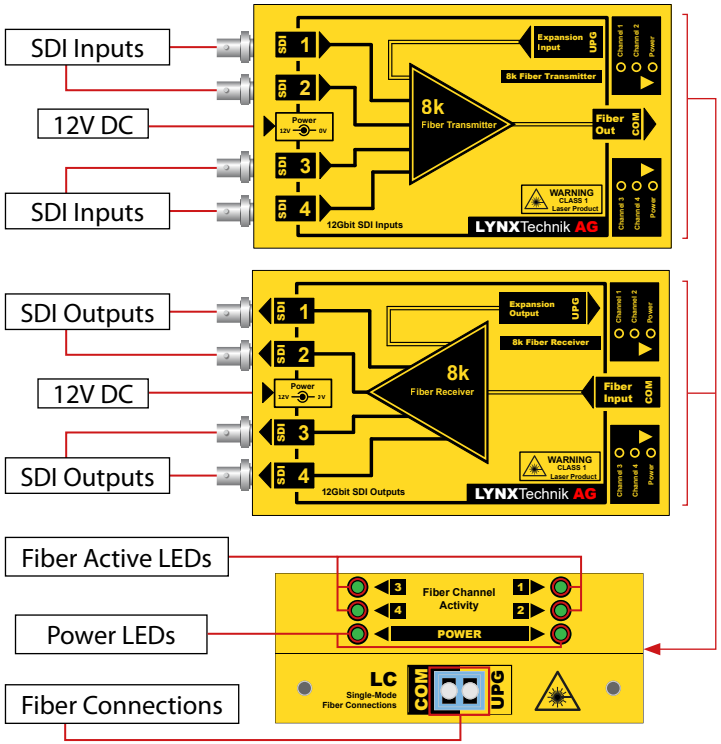

The OTR 1A41 is a self-contained fiber conversion solution for the transmission of four 12G-SDI signals over a single fiber link. The kit includes an OTX 1A41 fiber transmitter, an ORX 1A41 fiber receiver and 2 power supplies.

Connections

The SDI electrical inputs and outputs use BNC connectors. Fiber I/O connections are made via the COM and UPG ports on each module using LC/PC connectors.

All connections support hot plugging, allowing cables to be connected or disconnected while the modules are powered on.

Operation

The modules require no user configuration or manual settings. All operation is fully automatic. Each SDI channel is fully independent. For 8K use cases, the signal is split over four separate 12G-SDI links (48G) and supports full 8K resolution at 60fps. Each channel provides transparent SDI signal transport, preserving embedded audio and all associated ancillary data within the SDI stream. The modules will auto-detect and re-clock SDI bit-rates of 270Mbit, 1.5Gbit, 3Gbit, 6Gbit and 12Gbit.

The **Upgrade (UPG) port** allows an OTR 1A42 module to be connected, enabling the transmission of four additional SDI channels over the single fiber link.

Note: The system is designed for closed-loop, point-to-point operation and must not be connected to an external CWDM system. The modules require single-mode fiber; multi-mode fiber is not supported.

Indicators

Fiber Status LEDs indicate data transmission for each corresponding channel.

Two power status LEDs are provided. Both must be ON to indicate normal operation.

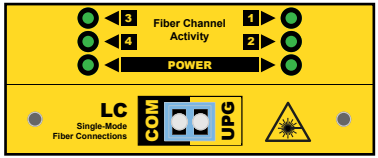

Power

Two external 12V DC power supplies are provided. 12V is the nominal power level. If you are applying your own power source or using a battery, please provide a clean 9-17V DC power source.

Do not exceed 17V DC as this may cause permanent damage to the module.

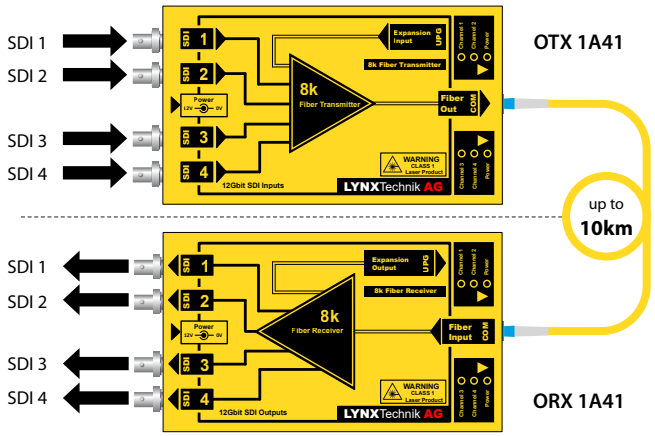

Power Lead Strain Relief

There is a small extruded loop above the power connector which can be used with the supplied tie-wrap to secure the power lead.

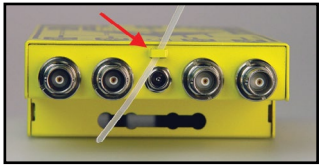

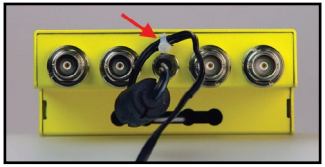

Optional Mounting Solutions

The optional RFR 1018 rack mount can be used to mount bigger sized yellobrik modules inside a 19“ rack.

