yellobrik®
OTR 1442

Technical Specifications

SDI Video	4x SDI inputs on 75 Ohm BNC connections [OTX 1442] 4x SDI outputs on 75 Ohm BNC connections [ORX 1442]
	SMPTE 259M-2008, SMPTE 292-1:2012, SMPTE 292-2:2011, SMPTE 424M-2006
	Multi-standard operation from 270Mbit/s to 12Gbit/s
	Return Loss: >15dB to 1.5GHz ; >10dB up to 3GHz
	Automatic cable EQ (Belden 1694A cable) 250m @ 270Mbit/s, 190m @ 1.5Gbit/s, 140m @ 3Gbit/s
Fiber I/O	1x Fiber I/O port (COM port) 1x Fiber expansion port (UPG port) - **not available in SC variant** LC/PC or SC/PC connections - Single-mode
	SMPTE 297M - 2006
	Internal CWDM Multiplexing on wavelenghts: 1350nm, 1370nm, 1390nm and 1410nm Optical budget: 10.6dB Maximum distance [typical]: 20km (12 miles)
Power	+12V DC (7-24V DC) - 2 x Power LEDs provided OTX 1442: 4.1W / ORX 1442: 3.8 W

WARNING
CLASS 1M LASER PRODUCT
LASER RADIATION

Module laser is active as soon as power is connected. Do not view directly with optical instruments.

Visit our website for the latest product updates: **www.lynx-technik.com**

LYNXTechnik | Broadcast Television Equipment

yellobrik® Quick Reference

OTR 1442

4-Channel 3G-SDI (4K) Fiber Transmission System

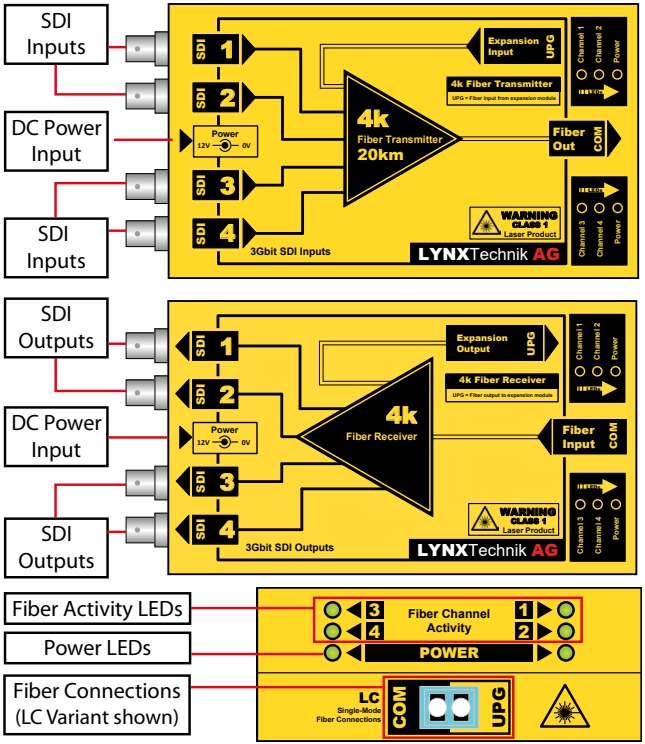

The OTR 1442 is a self-contained fiber conversion solution for the transmission of four 3G-SDI signals over a single fiber link. The kit includes an OTX 1442 fiber transmitter, an ORX 1442 fiber receiver and 2 power supplies.

Connections

The SDI electrical inputs and outputs use BNC connectors. Fiber I/O connections are made via the COM and UPG ports on each module using LC/PC connectors.
All connections support hot plugging, allowing cables to be connected or disconnected while the modules are powered on.

Operation

The modules require no user configuration or manual settings. All operation is fully automatic. Each SDI channel is fully independent. For 4K use cases, the signal is split over four separate 3G-SDI links (12G) and supports full 4K resolution at 60fps. Each channel provides transparent SDI signal transport, preserving embedded audio and all associated ancillary data within the SDI stream. The modules will auto-detect and re-clock SDI bit-rates of 270Mbit, 1.5Gbit and 3Gbit.

The **Upgrade (UPG) port** allows an OTR 1A41, OBD 1514 E or OBD 1510 D module to be connected, enabling the transmission of four additional SDI channels, 1Gigabit Ethernet or Serial data over the single fiber link.

Note: The system is designed for closed-loop, point-to-point operation and must not be connected to an external CWDM system. The modules require single-mode fiber; multi-mode fiber is not supported.

Indicators

Fiber Status LEDs indicate data transmission for each corresponding channel.

Two power status LEDs are provided. Both must be ON to indicate normal operation.

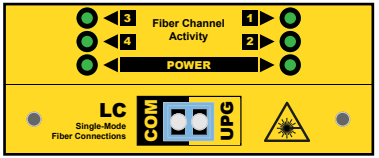

Power

Two external 12V DC power supplies are included. 12V DC is the nominal power level. If you are applying your own power source or using a battery, please provide a clean 7-24V DC power source.
Do not exceed 24V DC as this may cause permanent damage to the module.

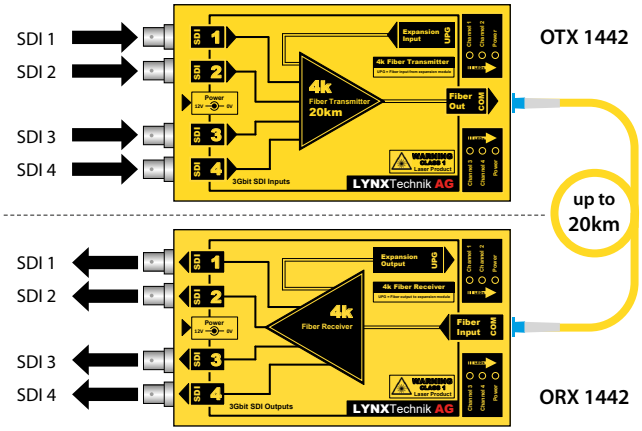

Power Lead Strain Relief

There is a small extruded loop above the power connector which can be used with the supplied tie-wrap to secure the power lead.

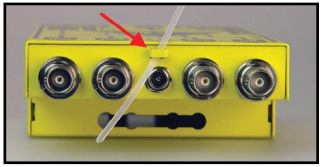

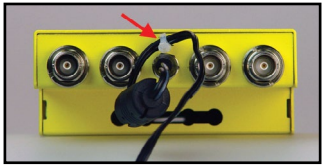

Optional Mounting Solutions

The optional RFR 1018 rack mount can be used to mount bigger sized yellobrik modules inside a 19“ rack.

