yellobrik® ORX 1802

Technical Specifications

Video	2x 3G-SDI output on 75 Ohm BNC connector
	SMPTE 424M, SMPTE 292M, SMPTE 259M, DVB-ASI
	Multi-standard operation from 270Mbit/s to 12Gbit/s
	Return Loss: >15dB up to 1.5GHz ; >10dB up to 3GHz
Fiber	1x Fiber Receiver Simplex LC/PC connector Single-mode Standard 1310nm or CWDM, Multi-mode 850nm
	SMPTE 297M - 2006
	Side-mounted RX activity LEDs
Power	+12V DC @ 2W nominal - (supports 7 - 24V DC input range)
Physical	Size: 140mm x 42mm x 22mm (5.51" x 1.65" x 0.86") incl. connectors Weight: 125g (4.4oz)
Includes	Module, AC power supply and SFP

Ordering Information

Model	Mode	Type	RX Input Range	RX Sensitivity	SFP Included
ORX 1802 LC	Single	1310 & CWDM	1260 - 1620nm	-18dBm	Yes
ORX 1802 ST	Single	Standard 1310	1260 - 1620nm	-18dBm	Yes
ORX 1802 SC	Single	Standard 1310	1260 - 1620nm	-18dBm	Yes
ORX 1802 HS	Single	1310 & CWDM	1260 - 1620nm	-26dBm	Yes
ORX 1802 MM	Multi	SR	780 - 880nm	-15dBm	Yes



WARNING
CLASS 1M LASER PRODUCT
LASER RADIATION

Do not view directly with optical instruments

Visit our website for the latest product updates: **www.lynx-technik.com**

LYNXTechnik | Broadcast Television Equipment

yellobrik® Quick Reference

ORX 1802

Fiber to 3G-SDI Receiver

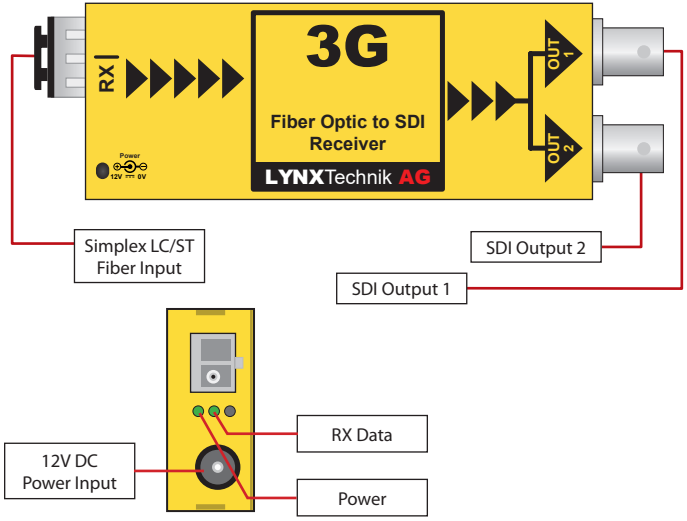

The ORX 1802 is a compact dual-channel Fiber-to-3G-SDI receiver for transporting uncompressed broadcast-quality video over long distances. Paired with a 3G-SDI optical transmitter, it provides a cost-effective solution for signals up to 2K 60fps 4:4:4, 12-bit. It automatically detects and re-clocks SDI fiber sources and support 3G-SDI Level A and B.

Connections

The SDI outputs are connected to the 75 Ohm BNC connections. The fiber interface supports an LC/PC simplex connection with dense or coarse wavelengths in single-mode. SR in multi-mode.
To protect the optical interface from dust and contamination, keep the supplied dust plug installed whenever the fiber connection is not in use.

A USB port is provided for firmware updates, and monitoring. Firmware updates are provided free of charge via yelloGUI and Lynx Centraal.

Operation

The ORX 1802 supports all SDI video formats from 270Mbit/s to 3Gbit/s and DVB/ASI. Data reception activity is indicated by the RX LED on the side of the module. The module has two identical output channels.

Operation is fully automatic. The fiber input video rates are automatically detected, reclocked and provided on the BNC output connectors. No user settings are provided for this module.

The module supports hot swapping and hot plugging.

Module LEDs

Power LED	
Green	Device Running
Yellow (blinking)	"Locate Module" function active
Red (blinking)	Hardware Issues
Off	Device Not Powered
RX LED	
Green	Valid Signal Received
Green/Red	Incompatible Input Signal
Off	No Signal Detected (missing, too weak or invalid)

Distances

ORX 1802 LC/ST up to 10 km (6.2 miles)
ORX 1802 HS up to 80 km (25 miles)
ORX 1802 MM up to 350m (0.2 miles)
Maximum optical transmission distance depends on transmitter power, fiber type, connector quality, splice losses, and overall link attenuation.

Power

The module requires a 12V DC power input. The LED indicates when power is connected. If using an external power supply, a clean 7–24V DC source is required.

The ORX 1802 has a power consumption of 2W (including SFP).

Power Lead Strain Relief

Yellobrik modules have a small hole above the power connection to prevent the power lead from being accidentally pulled out. Secure the lead using the supplied tie-wrap as shown below.

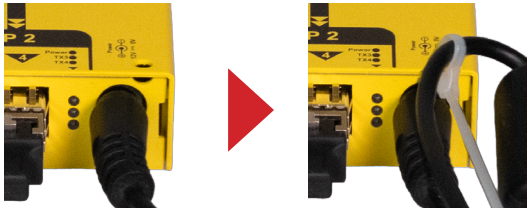

Optional Mounting Solutions

The optional RFR 1001 mounting bracket allows the module to be installed on any surface and 19'' rack rails.

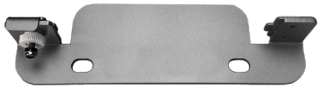

The RFR 1200 rack frame can hold up to 14 yellobriks and can provide power redundancy for all installed devices.

