yellobrik® DVD1823

Technical Specifications

SDI Inputs	2 x SDI; 75 Ohm BNC connector
	SMPTE 424M, SMPTE 292M, SMPTE 259M, AES10 (MADI)
	Multi-standard operation from 270Mbit/s to 3Gbit/s; reclocking
	Input present LED indication
	Electrical Return Loss: >15dB from 5MHz to 1.5GHz, >10dB from 1.5GHz to 3GHz
	Automatic cable EQ 250m @ 270Mbit/s, 190m @ 1.5Gbit/s, 130m @ 3Gbit/s
SDI Outputs	2x 3 multi-rate reclocked SDI outputs ; 75 Ohm BNC connectors
	SMPTE 424M, SMPTE 292M, SMPTE 259M, AES10 (MADI)
	Electrical Return Loss: >15dB from 5MHz to 1.5GHz, >10dB from 1.5GHz to 3GHz
	Alignment Jitter: < 0.2 UI @ 270Mbit/s, < 0.2 UI @ 1.5Gbit/s, < 0.3 UI @ 3Gbit/s
Power	+12V DC @ 2.7W nominal - (supports 7 - 24V DC input range)
Physical	Size: 138mm x 90mm x 22mm (5.43" x 3.54" x 0.86") including connectors Weight: 240g (8.46oz)

Visit our website for the latest product updates: **www.lynx-technik.com**

LYNXTechnik | Broadcast Television Equipment

yellobrik® Quick Reference

DVD 1823

2-Channel 3G-SDI and MADI 1×3 Distribution Amplifier

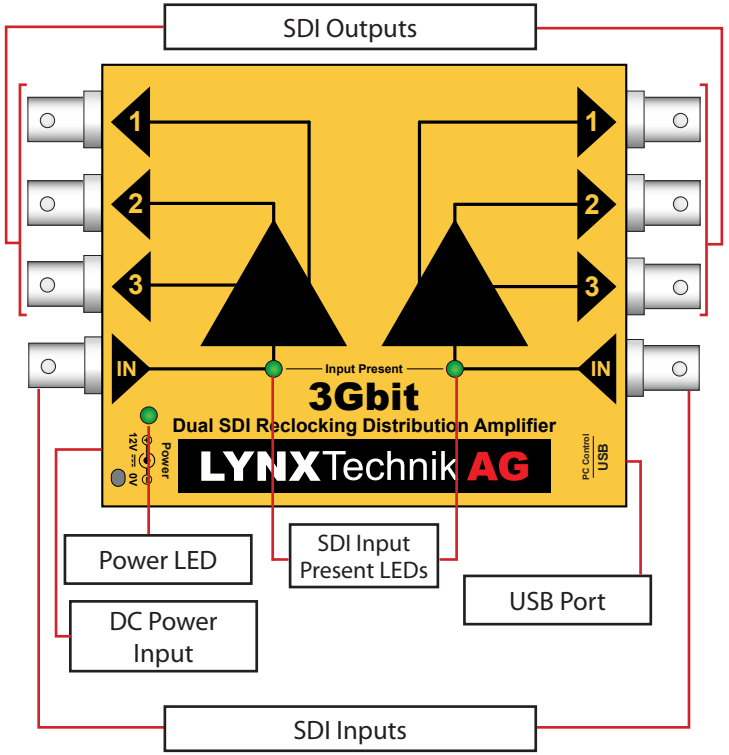

Connections

All connections are clearly indicated on the module and self explanatory. The I/O impedance is 75 Ohm.
The "Signal Present" LEDs illuminate when a valid signal is detected at the corresponding input.

Operation

The DVD 1823 has two fully independent multi-format SDI inputs, with three SDI outputs per channel. Different SDI video formats and standards (3G, 1.5G, 270M and MADI) can be transmitted and received.

Operation is fully automatic. The SDI input rates are automatically detected, reclocked and provided on the SDI output connectors. No user settings are provided for this module. The module supports hot swapping and hot plugging of connections.

Power

The module requires a 12V DC power input and the LED confirms when power is connected. A power supply is provided, however if you use your own power supply, please provide a clean power source between 7 and 24V DC. Power consumption information can be found in the technical specifications table.

Power Lead Strain Relief

The module has a small hole in the case located above the power connection. To prevent the power lead being accidentally pulled out, use the supplied tie-wrap and secure the lead as shown.

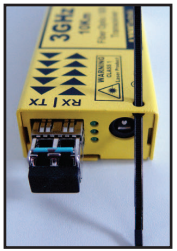

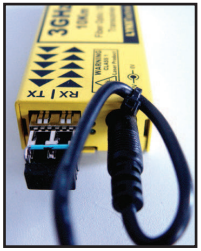

Optional Mounting Solutions

The optional RFR 1001 mounting bracket allows yellobriks to be installed on any surface or on 19" rack rails.



The RFR 1200 rack mount can mount up to 14 yellobrik modules and provide full power redundancy for all installed yellobriks.

